NEW OMAP Srl
via A. Volta, 1/C - 35020 Legnaro (PD) - Italy
+39.049.8830620 newomap.com

PLASTIC INNOVATIONS

1-06	**Sistema alimentazione trifase AT-D #** ***3-phase loading system AT-D #***							
Modello ***Model***	**Potenza motore** ***Motor power***	**Volume cicloni** ***Receivers volume***	**Tensione/Frequenza** ***Voltage/Frequency***	**Produzione oraria tot.** ***Tot. max Throughput***	**Filtro** ***Filter***	**Tubi aria/materiale** ***Air/material hoses***	**Sonda aspirazione** ***Suction wand***	
AT00D-R05/R05	750 W	5 + 5 dm^3	400V/3+N/50Hz	max 200 kg/h	Tessuto/*Cloth*	2x L=5+5m, Φ40mm	2x D=40 mm, alum.	
AT01D-R10/R10	1500 W	10 + 10 dm^3	400V/3+N/50Hz	max 300 kg/h	Tessuto/*Cloth*	2x L=5+5m, Φ40mm	2x D=40 mm, alum.	
AT02D-R20/R20	2200 W	20 + 20 dm^3	400V/3+N/50Hz	max 500 kg/h	Tessuto/*Cloth*	2x L=5+5m, Φ50mm	2x D=50 mm, alum.	
AT03D-R20/R20	3000 W	20 + 20 dm^3	400V/3+N/50Hz	max 800 kg/h	Tessuto/*Cloth*	2x L=5+5m, Φ50mm	2x D=50 mm, alum.	
AT05D-R30G/R30G-FMT	5500 W	30 + 30 dm^3	400V/3+N/50Hz	max 1200 kg/h	FMT	2x L=5+5m, Φ60mm	2x D=60 mm, alum.	
AT07D-R30G/R30G-FSR	7500 W	30 + 30 dm^3	400V/3+N/50Hz	max 2000 kg/h	FSR	2x L=5+5m, Φ60mm	2x D=60 mm, alum.	
AT11D-R30G/R30G-FSR	11000 W	30 + 30 dm^3	400V/3+N/50Hz	max 2400 kg/h	FSR	2x L=5+5m, Φ60mm	2x D=60 mm, alum.	

Una soffiante del vuoto con due ricevitori
 # One vacuum blower connected to two material receivers

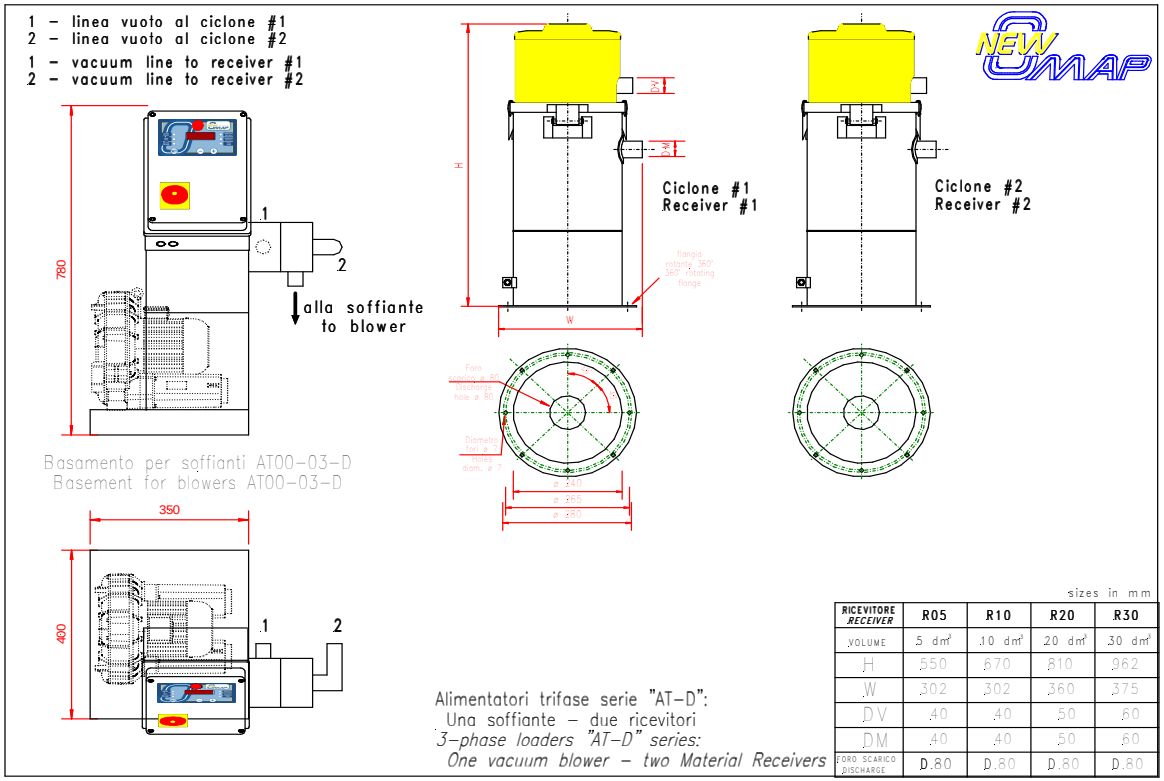

RICEVITORE RECEIVER	R05	R10	R20	R30
VOLUME	5 dm^3	10 dm^3	20 dm^3	30 dm^3
H	550	670	810	962
W	302	302	360	375
DV	40	40	50	60
DM	40	40	50	60
FORO SCARICO DISCHARGE	D.80	D.80	D.80	D.80